Spray robot series products

Zhihui Robot Technology (Jiangyin) Co., Ltd

Company Profile

Zhihui Robot is an innovative technology company dedicated to the research and development, production, sales, and application of specialized intelligent robots in the field of spraying. The domestic first proposed to solve the problem of flexible spraying in customer production through the technical route of "AI+spraying robot+spraying process", creating a "flexible spraying system" with independent intellectual property rights, combining hands, eyes, and brains in the spraying scene, solving the problems of "multiple types and difficult positioning" of customer workpieces, and making the application of spraying robots simpler and more intelligent!

The team members have been deeply involved in the field of spray painting robots for many years, independently developing intelligent spray painting robots with large arms, committed to solving the stubborn problem of "people-oriented" spray painting for medium and large workpieces. Meanwhile, the company We also provide customized automated flexible spraying solutions for customers, offering them affordable and user-friendly spraying robots to help upgrade the traditional spraying industry's intelligence!

SR5-1600

Activity radius 1600mm/offset wrist/load 5kg

Functional Features

BBR structure offset wrist, no singular points on the front

Explosion proof certification; Compact structure

1600mm arm span; 5KG end load

Wrist protection level reaches IP67

Can be paired with a 3D vision system for intelligent painting robots and an AR follow-up teaching handle, making it convenient and easy to use

Applicable scenarios

Suitable for narrow space spraying operation environment

Widely used in spraying scenarios such as 3C electronics, automotive components, and small metal parts

Applications

Suitable for industries such as automotive parts and small metal components

CHIEFLEY
PAINT ROBOT

SPECIFICATIONS

Product model		SR5-1600	
Activity radius		1600mm	
Repeat positioning		±0.05mm	
Action range&speed		Action range	speed
	A1	-170°~ +170°	2.7rad/s,159.5°/s
	A2	-95° ~ +170°	3.0rad/s,176.4°/s
	A3	-100° ~ +80°	3.3rad/s,191.5°/s
	A4	-360° ~ +360°	6.8rad/s,392.1°/s
	A5	-360° ~ +360°	6.8rad/s,392.1°/s
	A6	-360° ~ +360°	10.4rad/s ,600°/s
Allow static load torque	J4	39N.m	
	J5	31N.m	
	J6	17.6N.m	
Allow moment of inertia	J4	0.67kg.m²	
	J5	0.54kg.m²	
	J6	0.25kg.m²	

structure		Vertical multi joint type (6 degrees of freedom)
Installation method		Placed, inverted, wall mounted
Robot quality		150kg
protection grade	body	IP65
	Wrist components	IP67
Explosion proof sign	Model specifications	SR series
	gas	Ex eb ib mb pxb IIc T4 Gb
	dust	Ex tb ib mb pxb IIIC T135'CDb
Installation environment	temperature	0~45℃
	humidity	20%~80% RH (no condensation)
	vibrate	Below 4.9m/s ² (0.5G)
	other	No corrosive gases or liquids are allowed
		Stay away from electrical noise sources and electromagnetic sources, Stay away from strong microwaves, ultraviolet rays, X-rays, and radiation
Transportable weight	hand and wrist	5Kg
	boom	8kg
noise		70dB

OPERATING SPACE

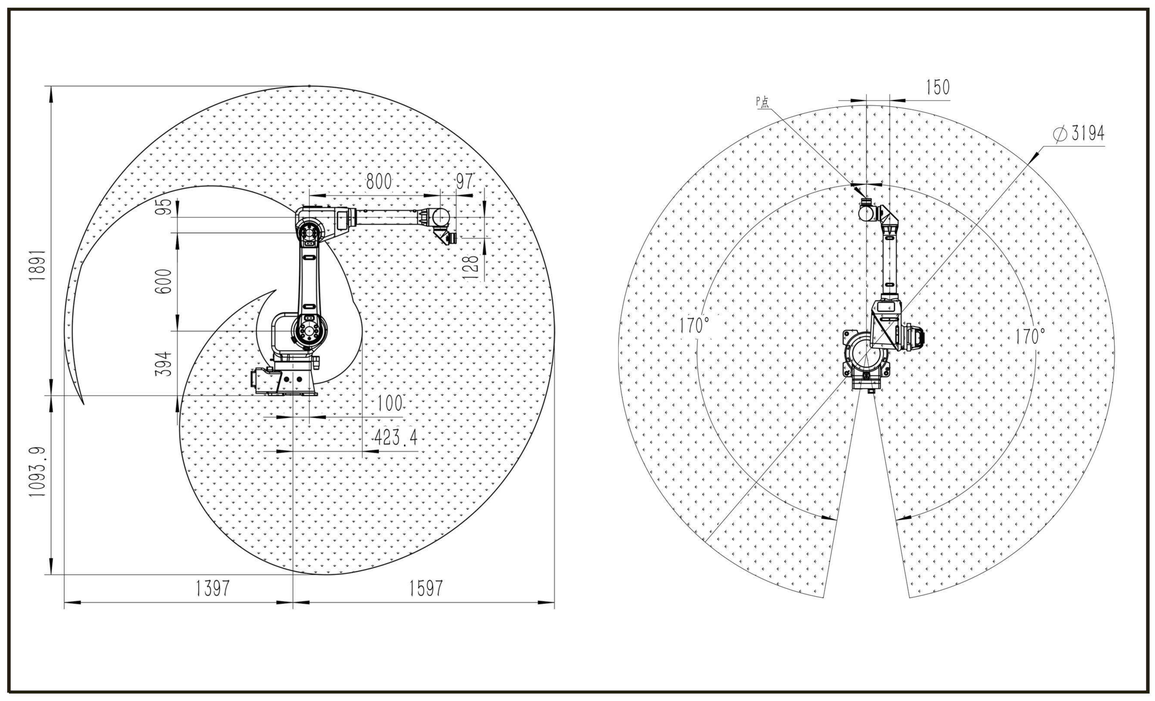

WRIST END LOAD MAP

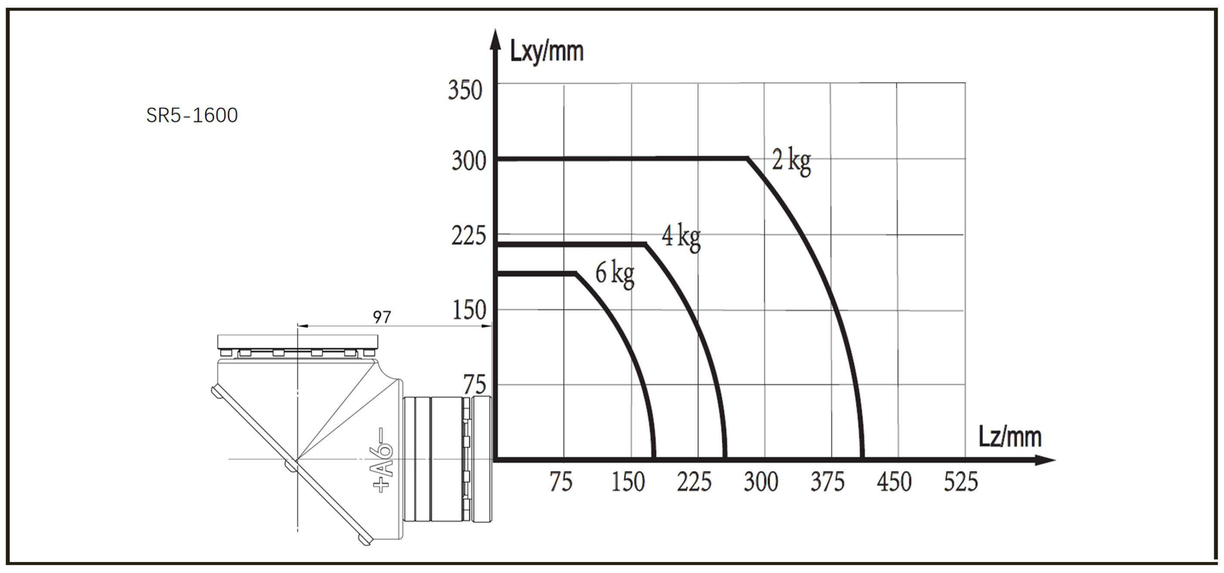

BASE& END FLANGE MOUNTING SIZE

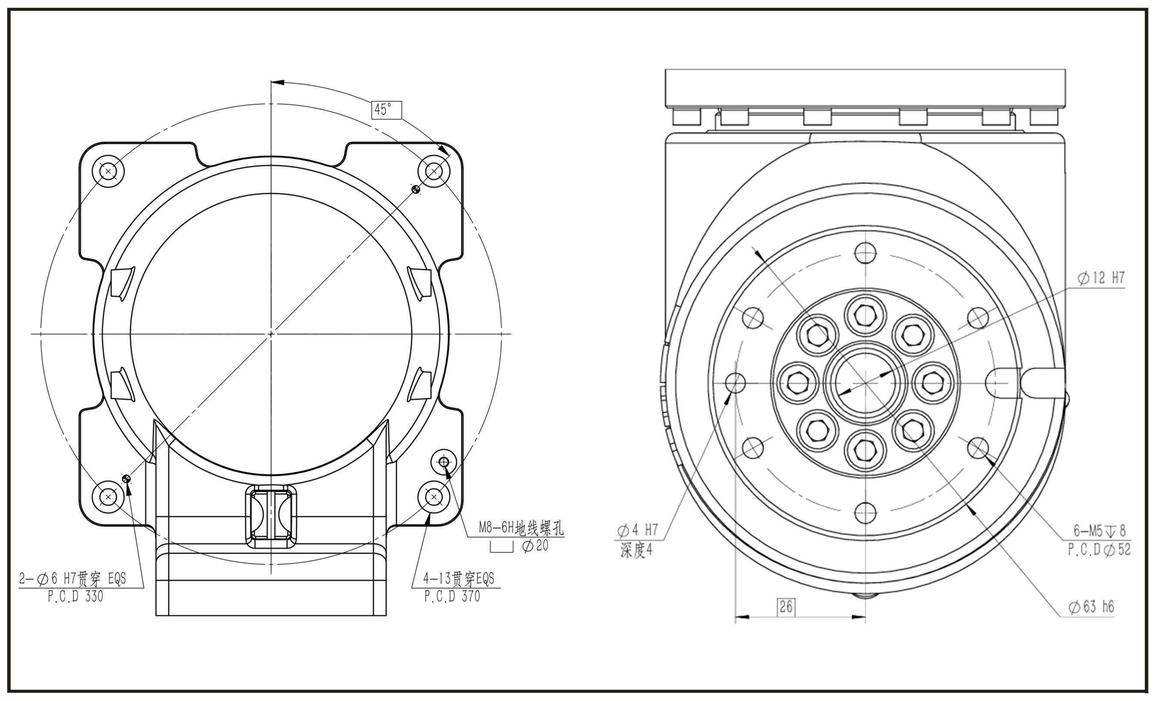

SELECTION&CONFIGURATION TABLE

project	Standard configuration	Optional configuration
Drive unit	6 axes	6+3 axes
Electric cabinet - body cable	Static cable	Static cable | drag chain cable
	8m	30m
Teaching pendant cable	10m	30m
Digital quantity DI/DO	14/16	Can increase the number of hardware modules
Analog AI/AO	2	Can add secure IO modules
Fieldbus	MODBUS TCP	RTU TCP/IP 485/232
Program capacity	1G	/
external interface	USB	/
software package	Spray coating process package	vision
display form	Teach Pendant	Touch Screen
colour	LY9H/2K Pure Black	Customer booking

SR12-2000

Activity radius 2000mm/offset wrist/load 15kg

Functional Features

BBR structure offset wrist, no singular points on the front

Explosion proof certification; Compact structure

2000mm arm span; 15KG end load

Wrist protection level reaches IP67

Can be paired with a 3D vision system for intelligent painting robots and an AR follow-up teaching handle, making it convenient and easy to use

Applicable scenarios

Suitable for narrow space spraying operation environment

Widely used in spray painting scenarios such as automotive parts, furniture, wheels, motors, engines, etc

Applications

Suitable for industries such as automotive parts, furniture, wheels, motors, engines, etc

CHIEFIEY
PAINT ROBOT

SPECIFICATIONS

Product model		SR12-2000	
Activity radius		2000mm	
Repeat positioning		±0.1mm	
Action range&speed		Action range	speed
	A1	-170°~ +170°	2.3rad/s,131.1°/s
	A2	-87° ~ +170°	1.9rad/s,111.8°/s
	A3	-120° ~ +75°	3.4rad/s,196.0°/s
	A4	-360° ~ +360°	6.8rad/s,392.1°/s
	A5	-360° ~ +360°	6.8rad/s,392.1°/s
	A6	-360° ~ +360°	10.4rad/s ,600°/s
Allow static load torque	J4	39N.m	
	J5	31N.m	
	J6	17.6N.m	
Allow moment of inertia	J4	1.22kg.m²	
	J5	0.9kg.m²	
	J6	0.3kg.m²	

structure		Vertical multi joint type (6 degrees of freedom)
Installation method		Placed, inverted, wall mounted
Robot quality		330kg
protection grade	body	IP65
	Wrist components	IP67
Explosion proof sign	Model specifications	SR series
	gas	Ex eb ib mb pxb llc T4 Gb
	dust	Ex tb ib mb pxb lllC T135'CDb
Installation environment	temperature	0~45℃
	humidity	20%~80% RH (no condensation)
	vibrate	Below 4.9m/s ² (0.5G)
	other	No corrosive gases or liquids are allowed
		Stay away from electrical noise sources and electromagnetic sources, Stay away from strong microwaves, ultraviolet rays, X-rays, and radiation
Transportable weight	hand and wrist	15Kg
	boom	20kg
noise		70dB

OPERATING SPACE

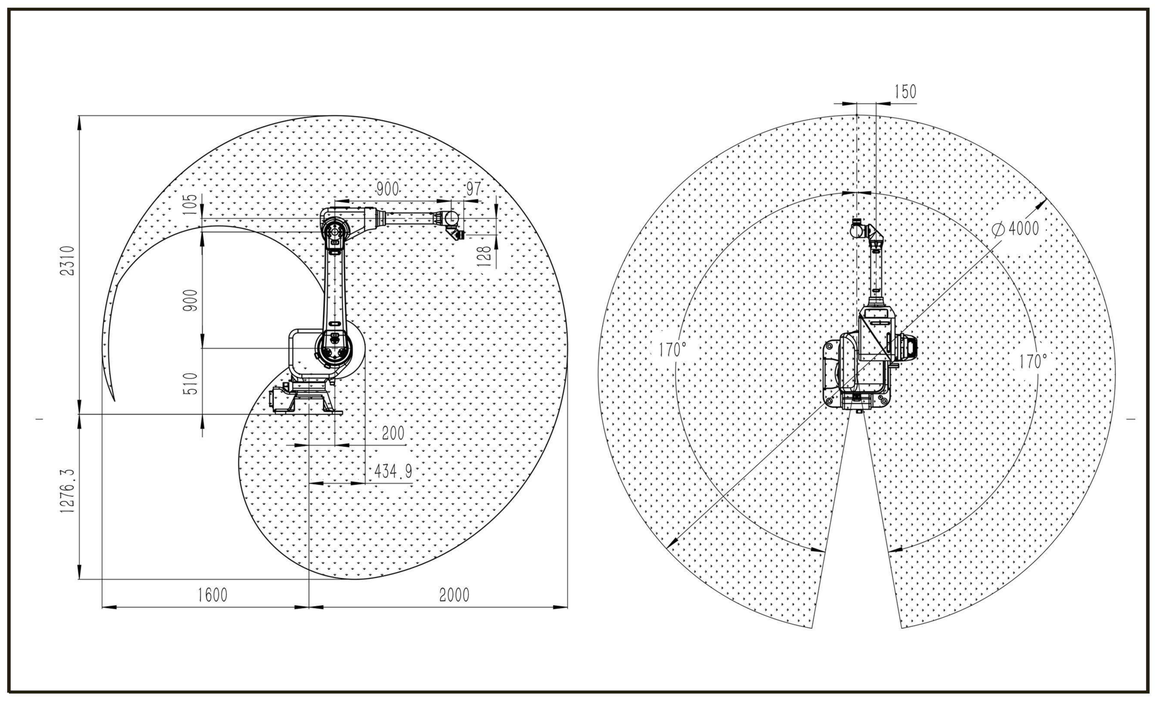

WRIST END LOAD MAP

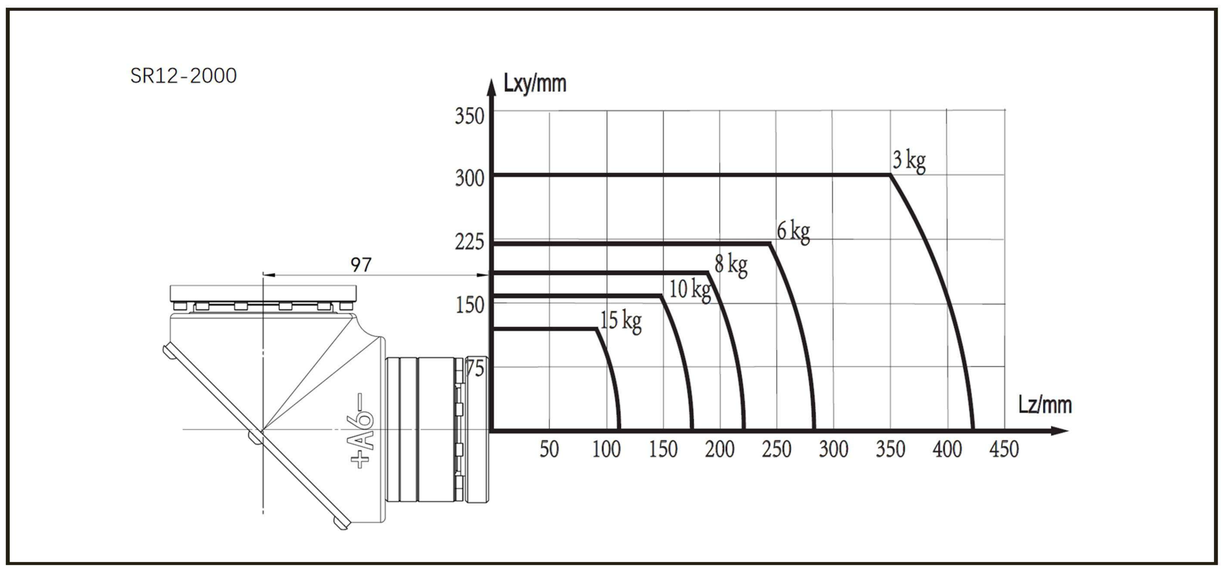

BASE& END FLANGE MOUNTING SIZE

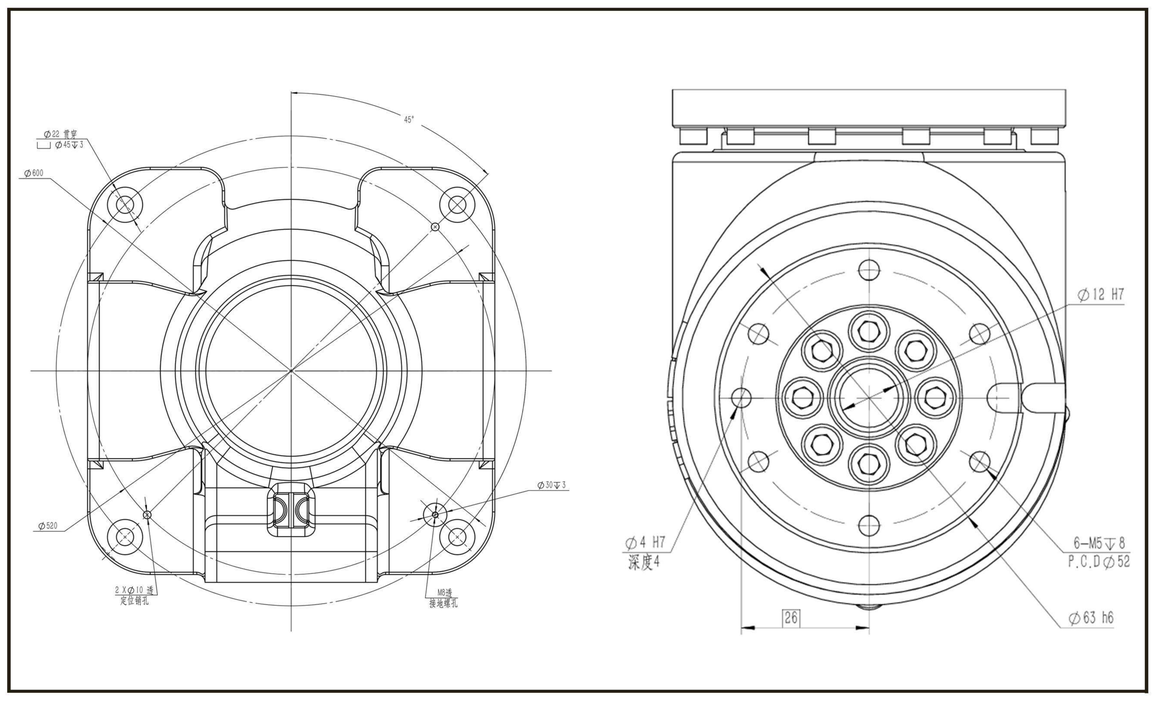

SELECTION&CONFIGURATION TABLE

project	Standard configuration	Optional configuration
Drive unit	6 axes	6+3 axes
Electric cabinet - body cable	Static cable	Static cable | drag chain cable
	8m	30m
Teaching pendant cable	10m	30m
Digital quantity DI/DO	14/16	Can increase the number of hardware modules
Analog AI/AO	2	Can add secure IO modules
Fieldbus	MODBUS TCP	RTU TCP/IP 485/232
Program capacity	1G	/
external interface	USB	/
software package	Spray coating process package	vision
display form	Teach Pendant	Touch Screen
colour	LY9H/2K Pure Black	Customer booking

SR8-2600

Activity radius 2600mm/offset wrist/load 8kg

Functional Features

BBR structure offset wrist, no singular points on the front

Explosion proof certification; Compact structure

2600mm arm span; 8KG end load

Wrist protection level reaches IP67

Can be paired with a 3D vision system for intelligent painting robots and an AR follow-up teaching handle, making it convenient and easy to use

Applicable scenarios

Suitable for narrow space spraying operation environment

Widely used in spraying scenarios such as automotive parts, furniture, electric vehicles, motors, engines, steel structures, etc

Applications

Suitable for industries such as automotive parts, furniture, electric vehicles, motors, engines, steel structures, etc

CHIEFIEY
PAINT ROBOT

SPECIFICATIONS

Product model		SR8-2600	
Activity radius		2600mm	
Repeat positioning		±0.1mm	
Action range&speed		Action range	speed
	A1	-170°~ +170°	2.3rad/s,131.1°/s
	A2	-87° ~ +170°	1.9rad/s,111.8°/s
	A3	-110° ~ +75°	3.4rad/s,196.0°/s
	A4	-360° ~ +360°	6.8rad/s,392.1°/s
	A5	-360° ~ +360°	6.8rad/s,392.1°/s
	A6	-360° ~ +360°	10.4rad/s ,600°/s
Allow static load torque	J4	39N.m	
	J5	31N.m	
	J6	17.6N.m	
Allow moment of inertia	J4	0.8kg.m²	
	J5	0.66kg.m²	
	J6	0.2kg.m²	

structure		Vertical multi joint type (6 degrees of freedom)
Installation method		Placed, inverted, wall mounted
Robot quality		350kg
protection grade	body	IP65
	Wrist components	IP67
Explosion proof sign	Model specifications	SR series
	gas	Ex eb ib mb pxb llc T4 Gb
	dust	Ex tb ib mb pxb lllC T135'CDb
Installation environment	temperature	0~45℃
	humidity	20%~80% RH (no condensation)
	vibrate	Below 4.9m/s ² (0.5G)
	other	No corrosive gases or liquids are allowed
		Stay away from electrical noise sources and electromagnetic sources, Stay away from strong microwaves, ultraviolet rays, X-rays, and radiation
Transportable weight	hand and wrist	8Kg
	boom	16kg
noise		70dB

OPERATING SPACE

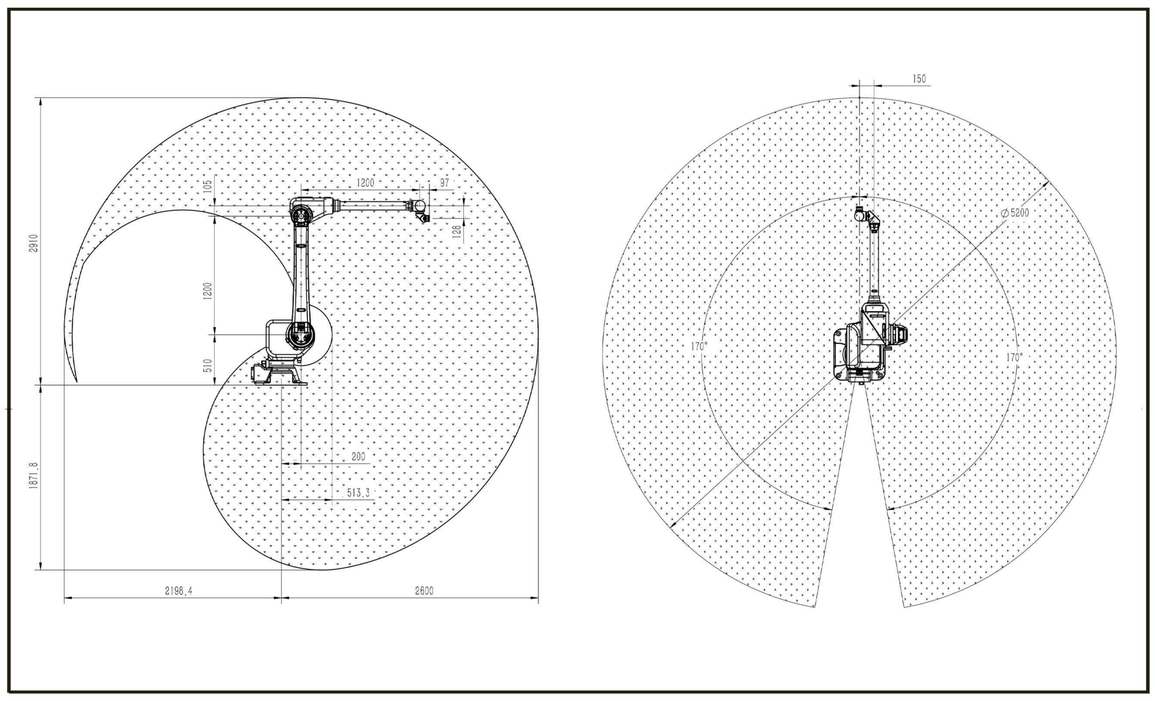

WRIST END LOAD MAP

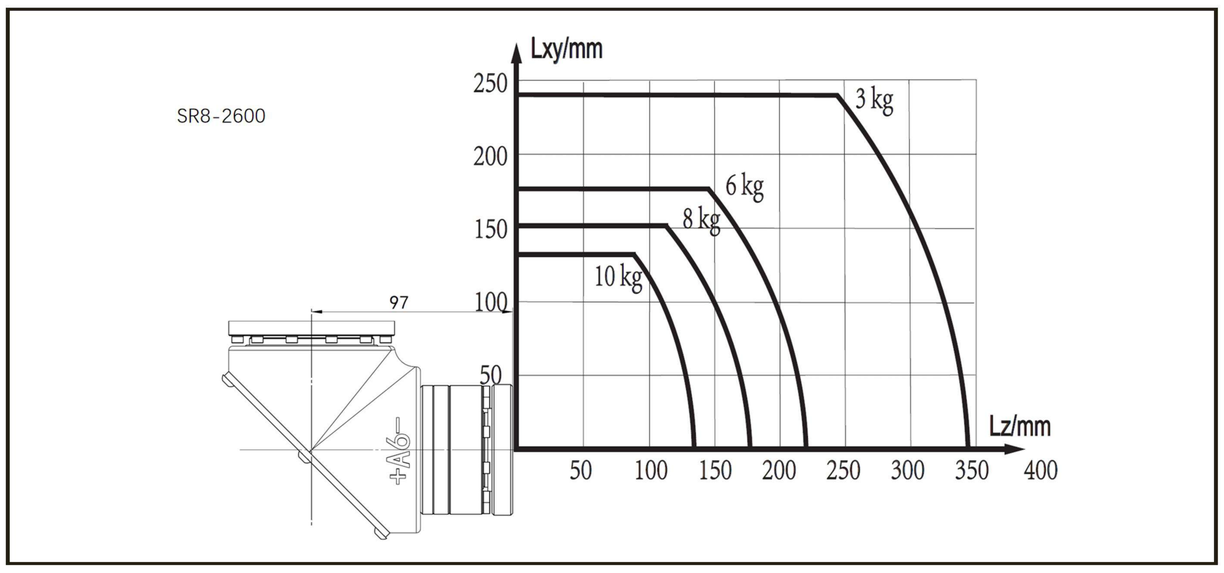

BASE& END FLANGE MOUNTING SIZE

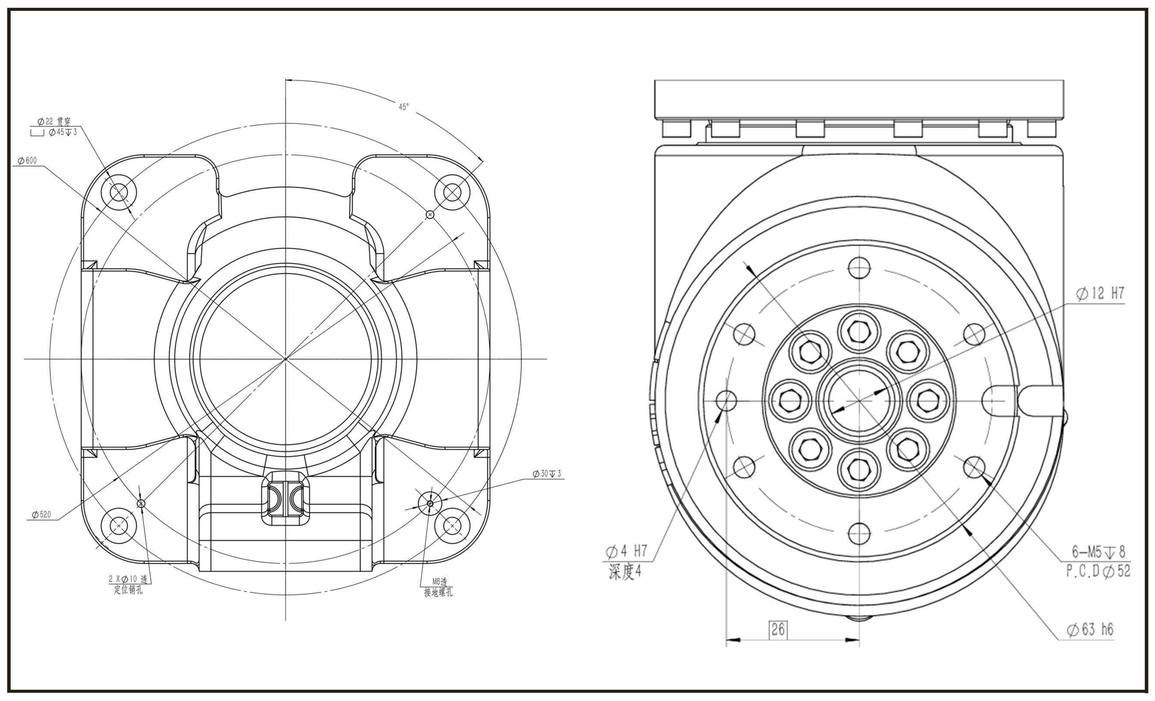

SELECTION&CONFIGURATION TABLE

project	Standard configuration	Optional configuration
Drive unit	6 axes	6+3 axes
Electric cabinet - body cable	Static cable	Static cable | drag chain cable
	8m	30m
Teaching pendant cable	10m	30m
Digital quantity DI/DO	14/16	Can increase the number of hardware modules
Analog AI/AO	2	Can add secure IO modules
Fieldbus	MODBUS TCP	RTU TCP/IP 485/232
Program capacity	1G	/
external interface	USB	/
software package	Spray coating process package	vision
display form	Teach Pendant	Touch Screen
colour	LY9H/2K Pure Black	Customer booking

SR12-3200

Activity radius 3200mm/offset wrist/load 15kg

Functional Features

BBR structure offset wrist, no singular points on the front

Explosion proof certification; Compact structure

3200mm arm span; 15KG end load

Wrist protection level reaches IP67

Can be paired with a 3D vision system for intelligent painting robots and an AR follow-up teaching handle, making it convenient and easy to use

Applicable scenarios

Suitable for narrow space spraying operation environment

Widely used in spray painting scenarios such as automotive parts, electric vehicles, wind turbine blades, and car compartments

Applications

Suitable for industries such as automotive parts, electric vehicles, wind turbine blades, and carriages

CHIEFLEY
PAINT ROBOT

产品参数/SPECIFICATIONS

Product model		SR12-3200	
Activity radius		3200mm	
Repeat positioning		±0.1mm	
Action range&speed		Action range	speed
	A1	-170°~ +170°	1.5rad/s,85°/s
	A2	-90° ~ +170°	1.8rad/s,105°/s
	A3	-125° ~ +75°	3.4rad/s,196.0°/s
	A4	-360° ~ +360°	6.1rad/s,352°/s
	A5	-360° ~ +360°	6.1rad/s,352°/s
	A6	-360° ~ +360°	9.4rad/s ,540°/s
Allow static load torque	J4	39N.m	
	J5	31N.m	
	J6	17.6N.m	
Allow moment of inertia	J4	2kg.m²	
	J5	1.7kg.m²	
	J6	0.3kg.m²	

structure		Vertical multi joint type (6 degrees of freedom)
Installation method		Placed, inverted, wall mounted
Robot quality		620kg
protection grade	body	IP65
	Wrist components	IP67
Explosion proof sign	Model specifications	SR series
	gas	Ex eb ib mb pxb IIc T4 Gb
	dust	Ex tb ib mb pxb IIIC T135'CDb
Installation environment	temperature	0~45℃
	humidity	20%~80% RH (no condensation)
	vibrate	Below 4.9m/s ² (0.5G)
	other	No corrosive gases or liquids are allowed
		Stay away from electrical noise sources and electromagnetic sources, Stay away from strong microwaves, ultraviolet rays, X-rays, and radiation
Transportable weight	hand and wrist	15Kg
	boom	20kg
noise		70dB

动作范围/OPERATING SPACE

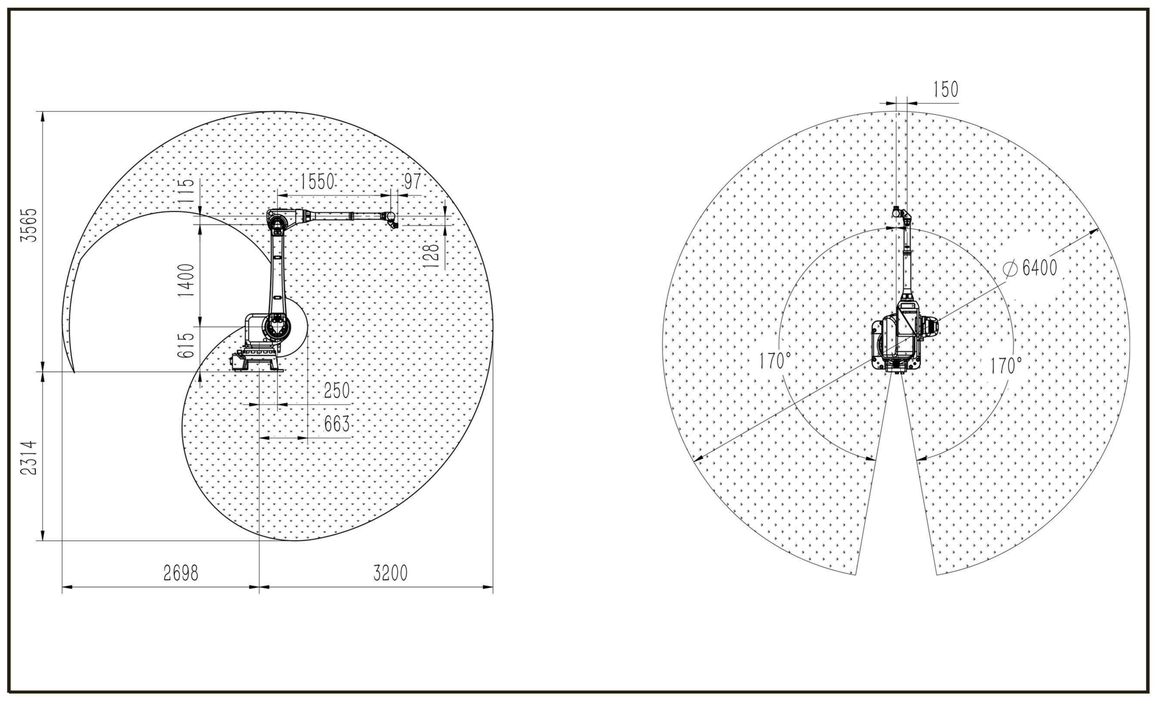

手腕末端负载图 / WRIST END LOAD MAP

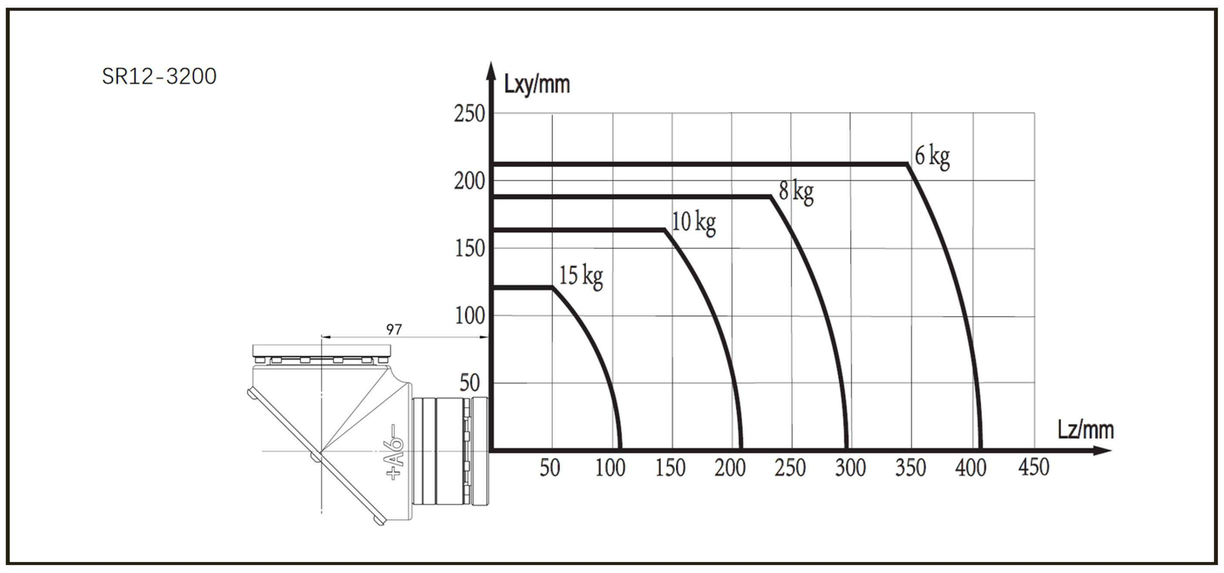

底座&法兰尺寸/BASE& END FLANGE MOUNTING SIZE

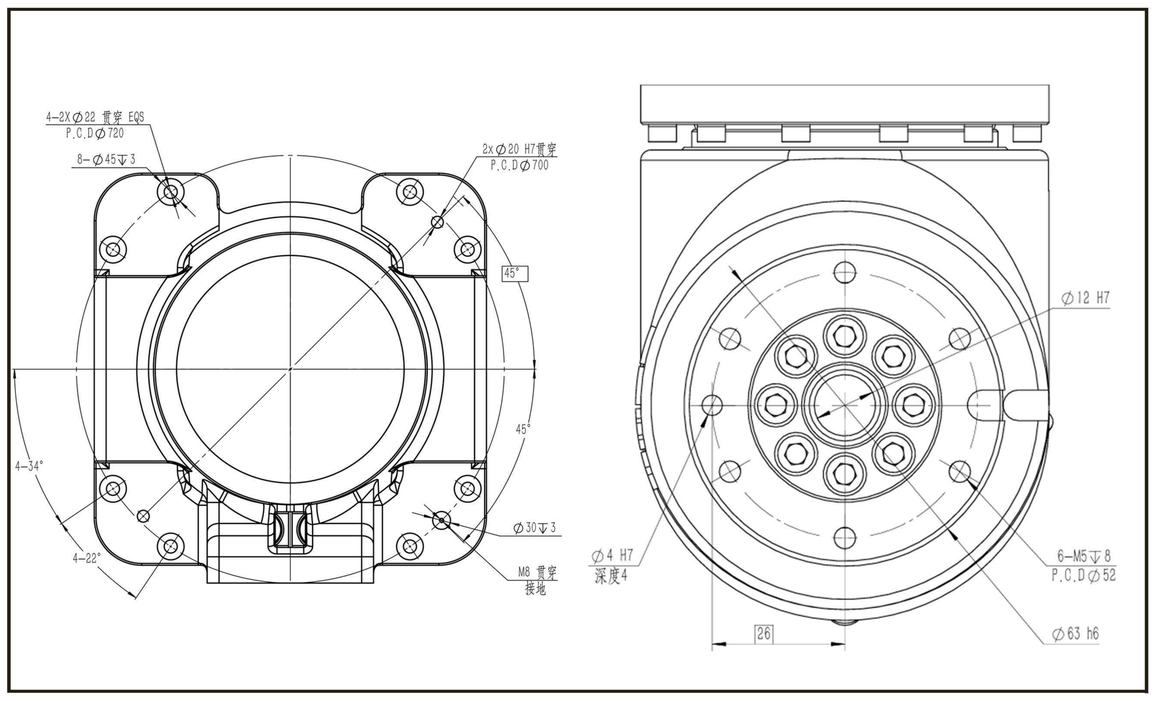

选型配置表 / SELECTION&CONFIGURATION TABLE

project	Standard configuration	Optional configuration
Drive unit	6 axes	6+3 axes
Electric cabinet - body cable	Static cable	Static cable | drag chain cable
	8m	30m
Teaching pendant cable	10m	30m
Digital quantity DI/DO	14/16	Can increase the number of hardware modules
Analog AI/AO	2	Can add secure IO modules
Fieldbus	MODBUS TCP	RTU TCP/IP 485/232
Program capacity	1G	/
external interface	USB	/
software package	Spray coating process package	vision
display form	Teach Pendant	Touch Screen
colour	LY9H/2K Pure Black	Customer booking

SR10-3800

Activity radius 3800mm/offset wrist/load 10kg

Functional Features

BBR structure offset wrist, no singular points on the front

Explosion proof certification; Compact structure

3800mm arm span; 10KG end load

The largest arm extended spraying robot on the market, with a wrist protection level of IP67

Can be paired with a 3D vision system for intelligent painting robots and an AR follow-up teaching handle, making it convenient and easy to use

Applicable scenarios

Widely used in spraying scenarios such as electric vehicles, wind turbine blades, carriages, wooden doors, and buses.

Applications

Suitable for industries such as electric vehicles, wind turbine blades, carriages, wooden doors, buses, etc

CHIEFIEY
PAINT ROBOT

产品参数/SPECIFICATIONS

Product model		SR10-3800	
Activity radius		3800mm	
Repeat positioning		±0.1mm	
Action range&speed		Action range	speed
	A1	-170°~ +170°	1.5rad/s,85°/s
	A2	-90° ~ +170°	1.8rad/s,105°/s
	A3	-125° ~ +75°	3.4rad/s,196.0°/s
	A4	-360° ~ +360°	6.1rad/s,352°/s
	A5	-360° ~ +360°	6.1rad/s,352°/s
	A6	-360° ~ +360°	9.4rad/s ,540°/s
Allow static load torque	J4	39N.m	
	J5	31N.m	
	J6	17.6N.m	
Allow moment of inertia	J4	1.5kg.m²	
	J5	1.2kg.m²	
	J6	0.2kg.m²	

structure		Vertical multi joint type (6 degrees of freedom)
Installation method		Placed, inverted, wall mounted
Robot quality		650kg
protection grade	body	IP65
	Wrist components	IP67
Explosion proof sign	Model specifications	SR series
	gas	Ex eb ib mb pxb IIc T4 Gb
	dust	Ex tb ib mb pxb IIIC T135'CDb
Installation environment	temperature	0~45℃
	humidity	20%~80% RH (no condensation)
	vibrate	Below 4.9m/s ² (0.5G)
	other	No corrosive gases or liquids are allowed
		Stay away from electrical noise sources and electromagnetic sources, Stay away from strong microwaves, ultraviolet rays, X-rays, and radiation
Transportable weight	hand and wrist	10Kg
	boom	20kg
noise		70dB

动作范围/OPERATING SPACE

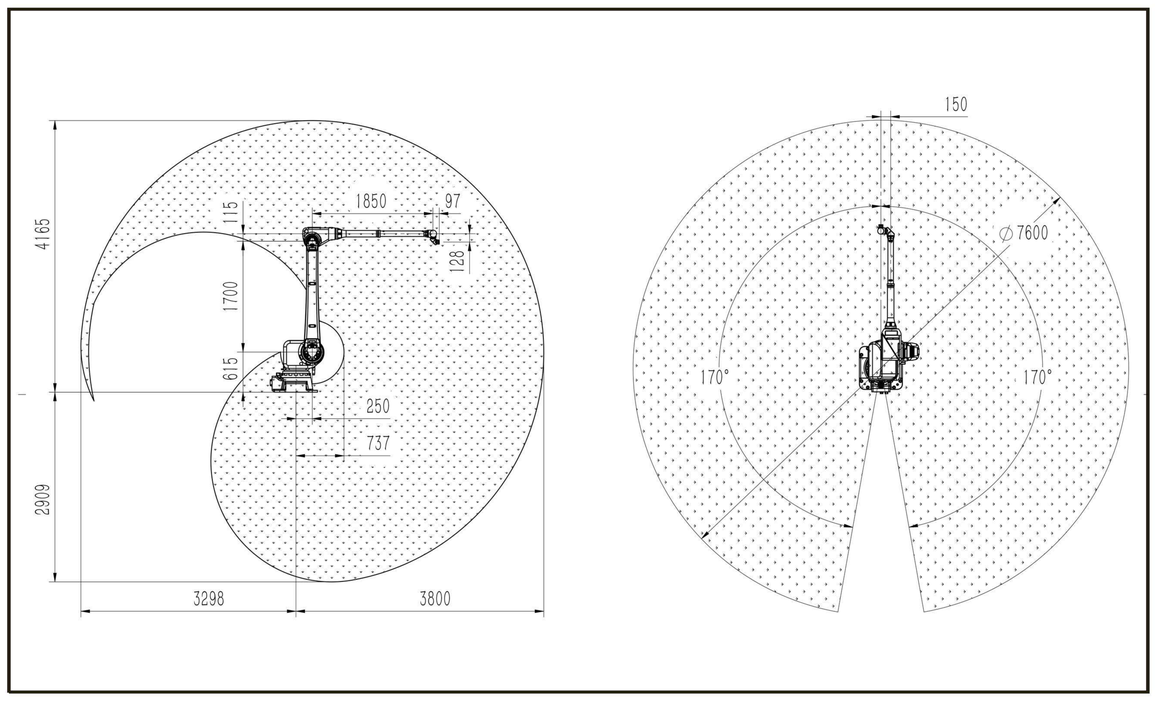

WRIST END LOAD MAP

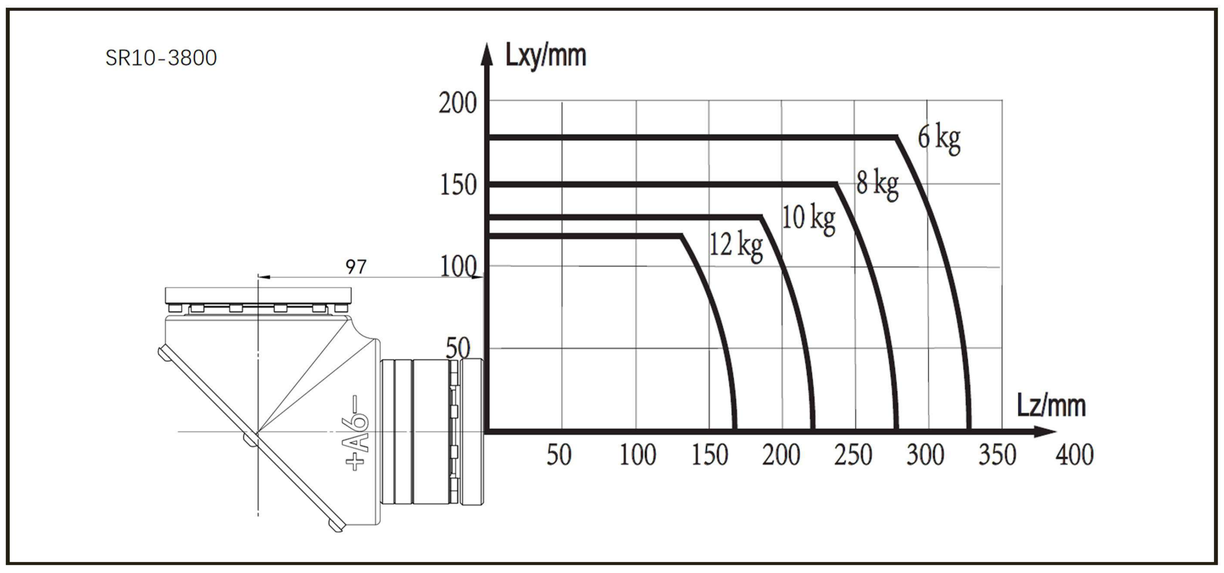

底座&法兰尺寸/BASE& END FLANGE MOUNTING SIZE

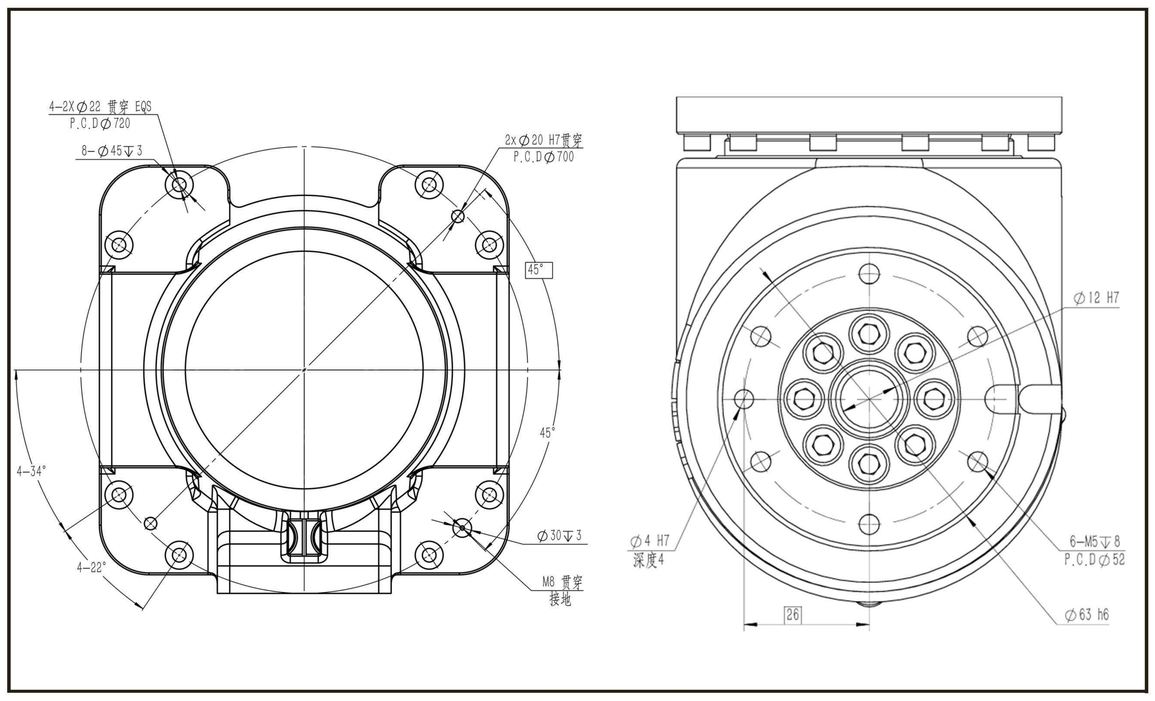

SELECTION&CONFIGURATION TABLE

project	Standard configuration	Optional configuration
Drive unit	6 axes	6+3 axes
Electric cabinet - body cable	Static cable	Static cable | drag chain cable
	8m	30m
Teaching pendant cable	10m	30m
Digital quantity DI/DO	14/16	Can increase the number of hardware modules
Analog AI/AO	2	Can add secure IO modules
Fieldbus	MODBUS TCP	RTU TCP/IP 485/232
Program capacity	1G	/
external interface	USB	/
software package	Spray coating process package	vision
display form	Teach Pendant	Touch Screen
colour	LY9H/2K Pure Black	Customer booking